PhD Qualifier Exam Electronics 2015 EC1

1-In the two-stage amplifier shown below, X denotes the W/L ratio of the transistors

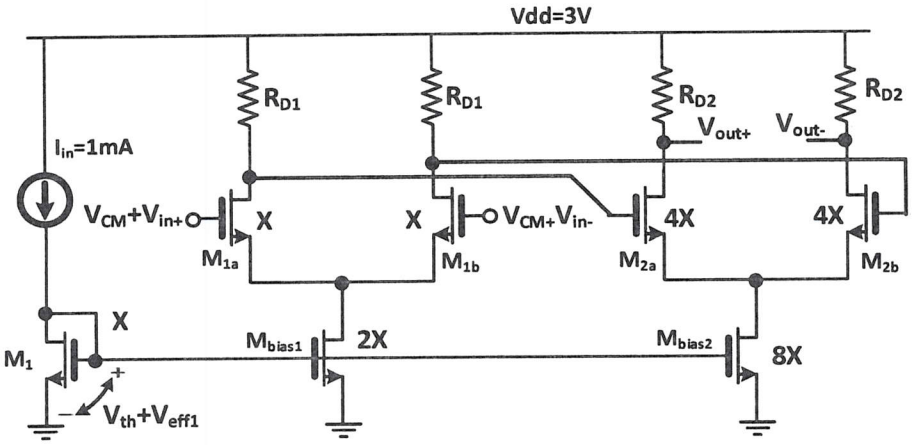

$\mu_n C_{ox} = 200\mu A^2 / V$

$V_{th} = 0.5V$

$\lambda = 0$

$X = \frac{W}{L} = 10$

a) Find the differential voltage gain $V_{out+} - V_{out-} / V_{in+} - V_{in-}$ assuming all transistors are in saturation (20%)

b) Assuming all transistors remain in saturation, if we double the **Iin**, how much will the differential voltage gain *change*? (20%)

c) What is the minimum input common-mode voltage (Vcm) to guarantee all transistors remain in saturation (20%)

d) If $Vcm=2V_{th}+V_{eff1}$, find the range of R_{D1} and R_{D2} to guarantee all transistors remain in saturation (40%)

EC2

2- In circuit shown below, X denotes the W/L ratio of the transistors, and the Opamp has infinite input impedance

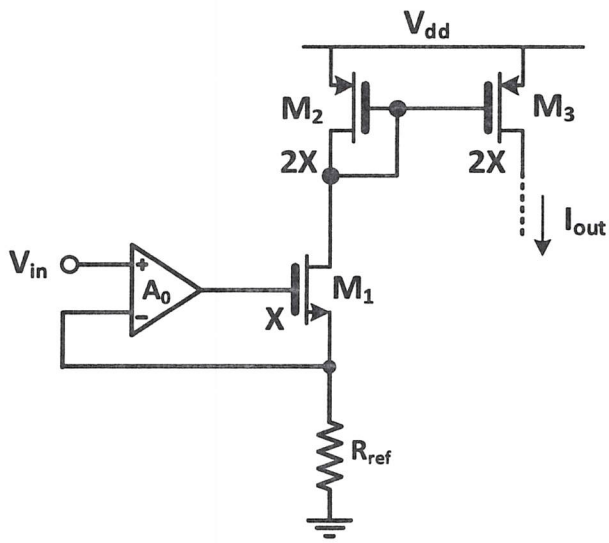

$\lambda = 0$

a) Assuming A0→∞ and all the transistors are in saturation, find I_{out} (30%)

b) Find I_{out} if **the Opamp has the limited gain equal to A_0** and all the transistors are in saturation (70%)