EC1

PhD Qualifier Exam **Electronics** **2017**

1-In the amplifier shown below, X denotes the W/L ratio of the transistors. The transistors M_4, M_{CMFB} and resistors R_{CM} are used to set the DC voltage of the output. Assuming all transistors are in saturation:

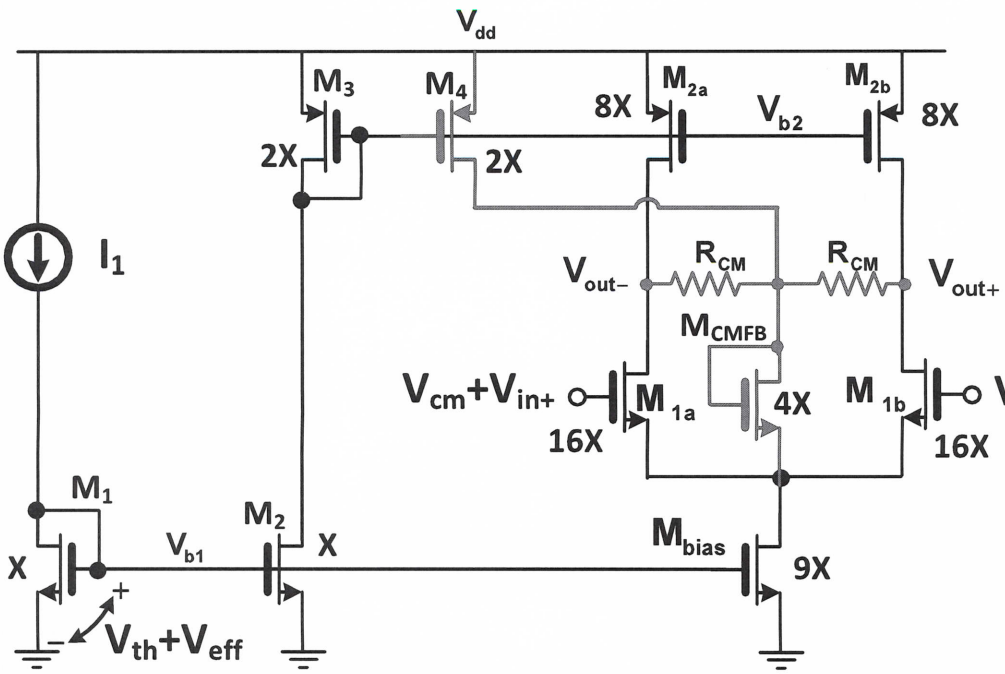

$\mu_n C_{ox} = 2\,\mu_p C_{ox}$

$V_{thN} = |V_{thP}| = V_{th}$

$\lambda = 0$

$X = \frac{W}{L}$

For parts (a),(b), (c) and (d), your answer should be in terms of Veff and Vth of M1 and Vcm (input common-mode).

a) What is the drain-source current (I_{ds}) of M_{CMFB}?(20%)
b) What is the Vout (Vout+ and Vout-) DC voltage? (30%)
c) What is the **minimum** input common-mode voltage (Vcm) to guarantee **all** transistors remain in saturation (20%)
d) If M_{CMFB} is resized from **4X to 1X**, what would be the VDS (drain-source voltage) of M_{1a} and M_{1b}? (15%)
e) Find the differential voltage gain $V_{out+} - V_{out-} / V_{in+} - V_{in-}$ assuming all transistors are in saturation (15%)

EC2

2- In the following circuit, assuming all the transistors are in saturation, and transistors have **no parasitic** capacitance, and $\lambda \neq 0$ (each transistor has output resistance equal to r_o)

(a) Find the poles at Vx and Vout (40%)

(b) Find the unity gain BW (ω_{UGBW}) assuming ω_x (pole at Vx) is the dominant pole and ω_{out} (pole at Vout) is at much higher frequency than ω_{UGBW}. ($\omega_{out} >> \omega_{UGBW}$) (30%)
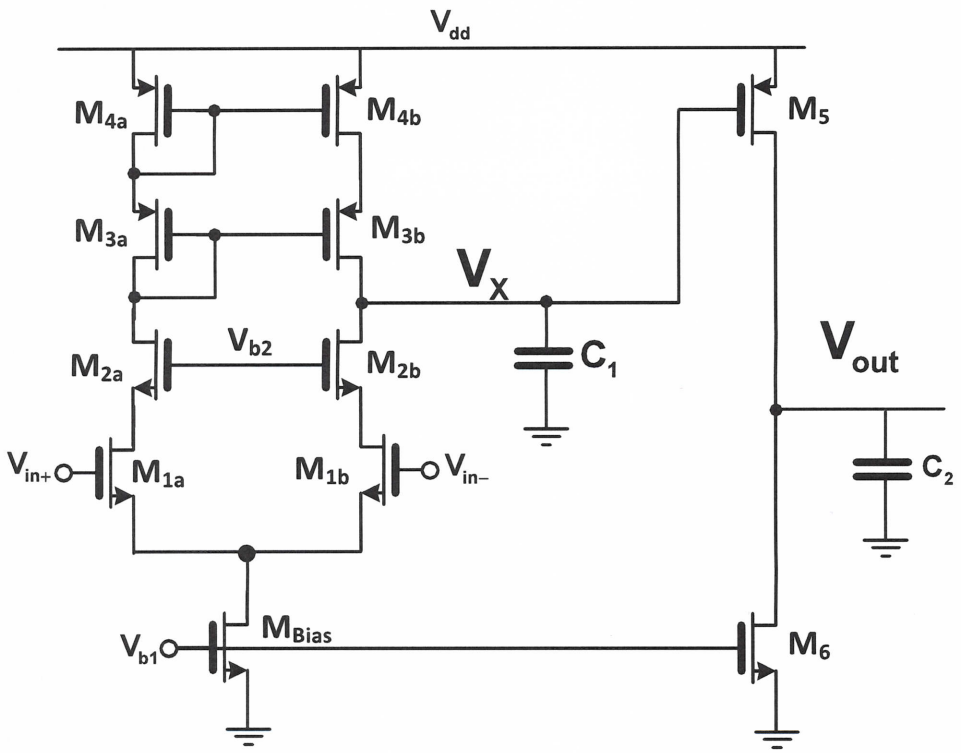
(c) If $\omega_{out} = \omega_x$, give an expression for the -3dB frequency of the system. (30%)