Ph.D. Qualifying Exam – Microprocessor Apps. (Jan'07)

1. Using 8K×4 SRAM devices with CE* (chip enable), OE* (output enable), and R/W* (read/write) control pins, where * denotes active low, plus one 3×8 decoder device (e.g. 74LS138; see diagram), design the configuration and interface for a memory subsystem that fills the last 16KB of the address space of an 8-bit microprocessor with A15:A0, D7:D0, and R/W* bus lines. Next, add a single byte-wide input port for this same system mapped redundantly (i.e. where we save interface logic via partial decoding) to addresses $1000:3FFF (where $ = hexadecimal) for an octal tristate-buffer device with an EN* (enable) control pin. Use simple gates as needed to complete this interface. Finally, for the whole solution, include a single detailed memory map. *Show all your work neatly, and clearly state any assumptions made in solving this problem.*

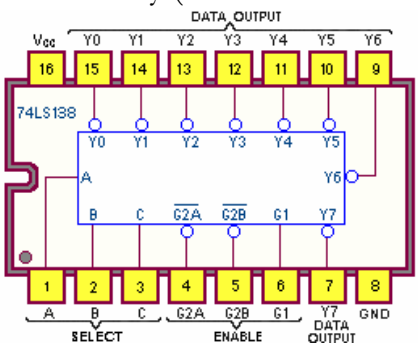

2. Given an excerpt (listed below) from the programming model of a simple 8-bit microprocessor with a 16-bit address bus, write an assembly-language program (with comments) to conduct a memory test on the last 16KB of the address space of the microprocessor by writing then reading back the value $AA (where $ = hexadecimal) then the value $55 at each location, counting the number of locations that experience an error. You may assume that no more than 255 memory errors occur. Store the total number of errors in register D. Include with your solution a flowchart for the program. *Show all your work neatly, and clearly state any assumptions made in solving this problem.*

8-bit accumulator registers: `A, B, C, D`
16-bit address/index/counter registers: `X, Y, Z`

Control[1] instructions: `JE, JNE, JLE, JGE, HALT`
Instructions[2] for 8-bit operands: `MOV, ADD, SUB, CMP, MUL`
Instructions[3] for 16-bit operands: `MOVW, INCW, DECW, CMPW`

Addressing modes (examples show particular mode in use via bold font):

- Immediate – e.g. `MOV A,#5` or `MOVW X,#$1000`
- Register – e.g. `MOV A,B` or `INCW Y`
- Direct – e.g. `MOV A,$1000` or `MOVW $1000,Z`
- Indirect – e.g. `MOV A,[X]` or `CMP A,[X]`

[1] `JE` = Jump Equal, `JNE` = Jump Not Equal, `JLE` = Jump Less or Equal, `JGE` = Jump Greater or Equal
[2] `MOV` = Move, `ADD` = Add, `SUB` = Subtract, `CMP` = Compare, `MUL` = Multiply
[3] `MOVW` = Move Word, `INCW` = Increment Word, `DECW` = Decrement Word, `CMPW` = Compare Word